

SECTIONAL VIEW B-B

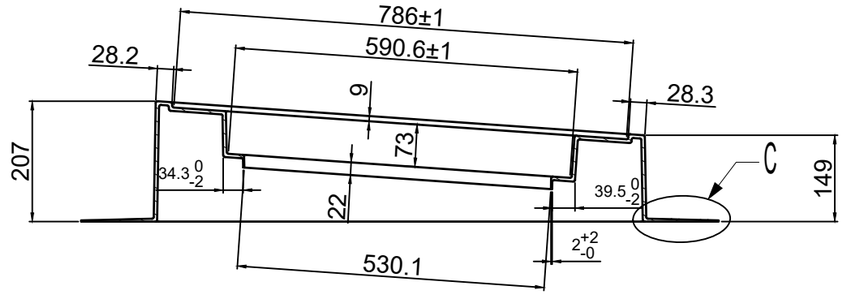

SECTIONAL VIEW A-A

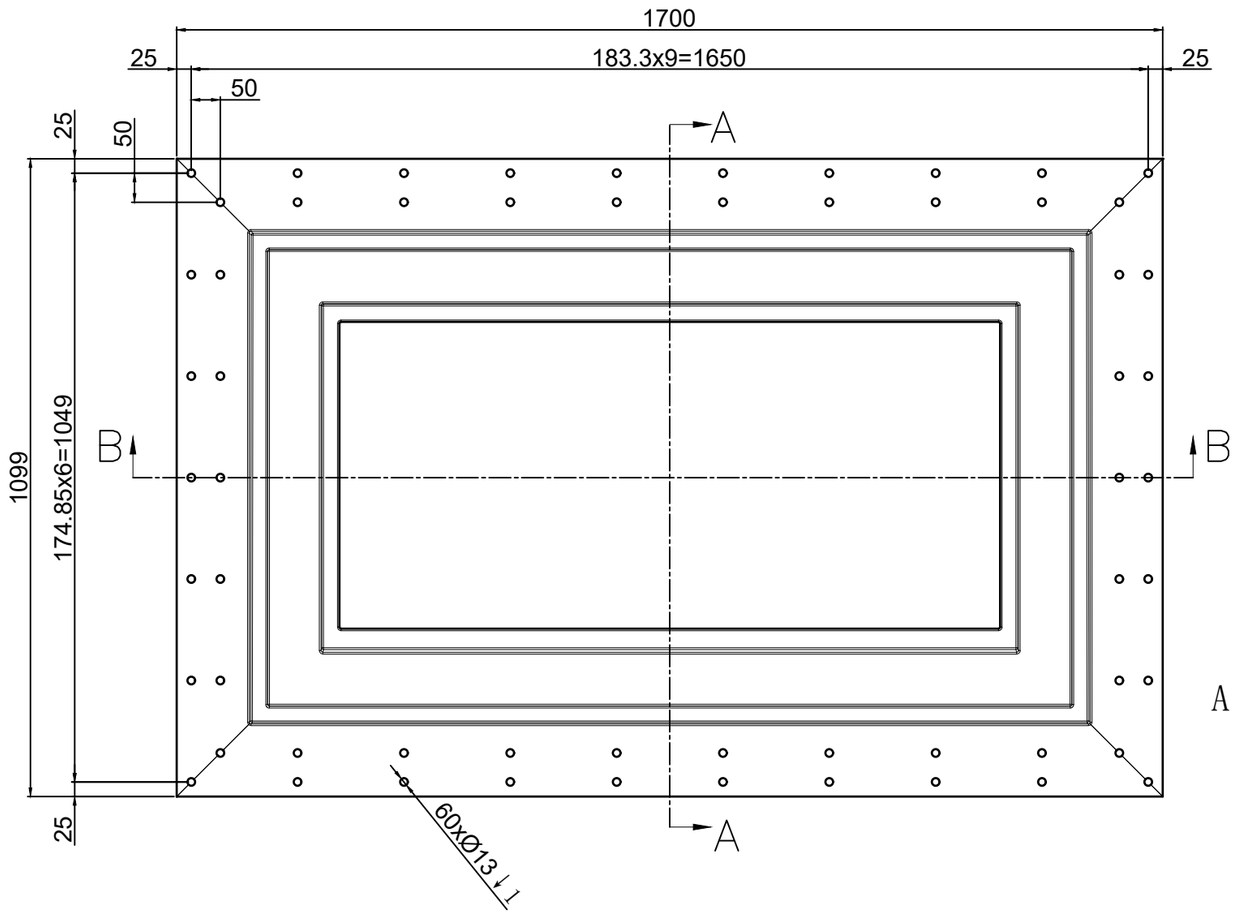



DETAILED VIEW C

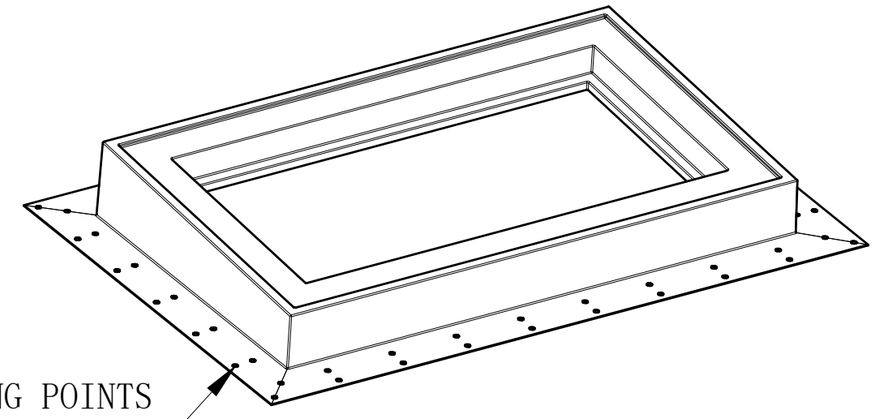

A TOTAL OF 80 FIXING POINTS ARE REQUIRED; OUR COMPANY DOES NOT NEED TO DRILL HOLES.

NOTE: ALL FILLETS ARE R3.

UNLESS OTHERWISE SPECIFIED: DIMENSIONS ARE IN MILLIMETERS SURFACE FINISH: TOLERANCES: LINEAR: ANGULAR:	FINISH:					
	NAME	SIGNATURE	DATE			
DRAWN			2025.5.28			
CHK'D						
APPV'D						
MFG						
Q.A				MATERIAL: FRP		
				WEIGHT:		

DO NOT SCALE DRAWING | REVISION

NŌTAN INTEGRATED BLINDS

7 Tresham Road, Orton Southgate, Peterborough, PE2 6SG

01638 597 729 | info@notan.co.uk

RAPID KERB

DWG NO. 600x1200 | A3 | A

SCALE:1:1 | SHEET 1 OF 1