

SECTIONAL VIEW A-A

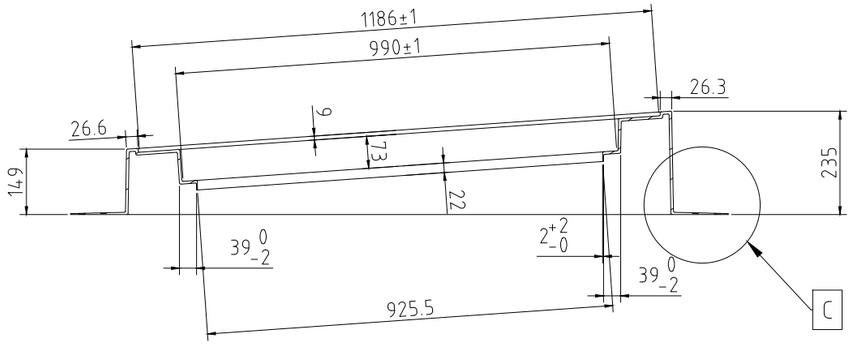

SECTIONAL VIEW B-B

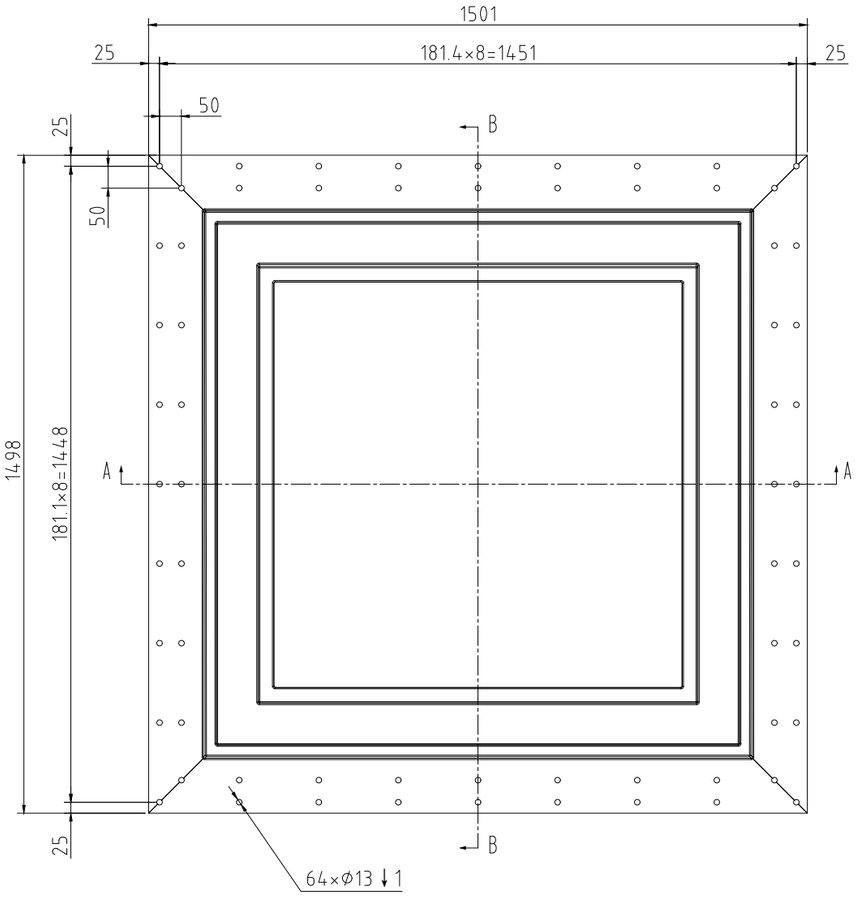

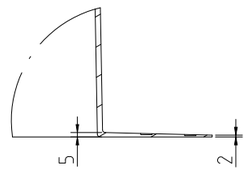

DETAILED VIEW C

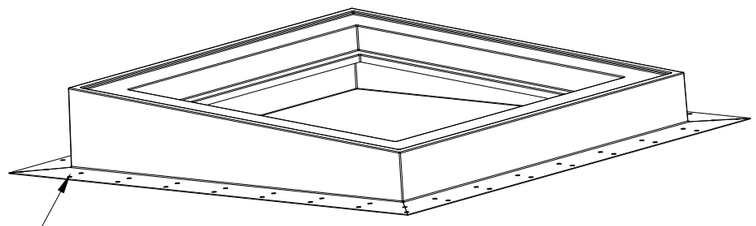

A TOTAL OF 64 FIXING POINTS ARE REQUIRED; OUR COMPANY DOES NOT NEED TO DRILL HOLES.

NOTE: ALL FILLETS ARE R3.

UNLESS OTHERWISE SPECIFIED: DIMENSIONS ARE IN MILLIMETERS SURFACE FINISH: TOLERANCES: LINEAR: ANGULAR:	FINISH:		DEBUR AND BREAK SHARP EDGES	DO NOT SCALE DRAWING	REVISION	
	NAME	SIGNATURE	DATE			
DRAWN			2025.5.30			
CHK'D						
APPV'D						
MFG						
Q.A				MATERIAL: FRP	DWG NO. 1000×1000	A3
						0
				WEIGHT:	SCALE: 1:12	SHEET 1 OF 1

NŌTAN INTEGRATED BLINDS
7 Tresham Road, Orton Southgate, Peterborough, PE2 6SG
01638 597 729 | info@notan.co.uk

RAPID KERB